QUANTERA

ERA-NET Cofund in Quantum Technologies

QuantERA Funded Projects Mid-term Strategic Conference

Granada, 13-14 November 2019

NanoSpin

J. Anders. M.B. Plenio, F. Jelezko, I. Schwartz, P. Cigler, A. Gali, A. Velders, M. Nesladek

This project has received funding from the European Union's Horizon 2020 research and innovation programme under grant agreement No 731473.

The NanoSpin vision

Research platform for first of a kind experiments

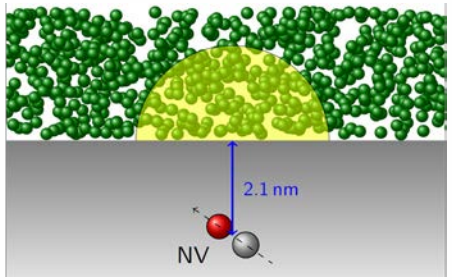

Objective 1 – Nanoscale NMR

Portable low-cost spectrometer with high-end performance

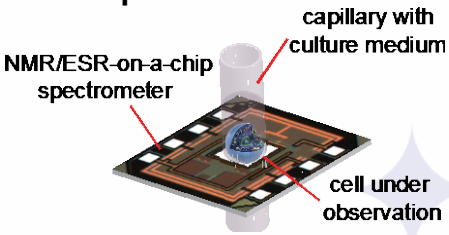

Objective 2 – Spectrometer-on-a-chip

Diamond DNP-NMR as performance booster for standard NMR applications

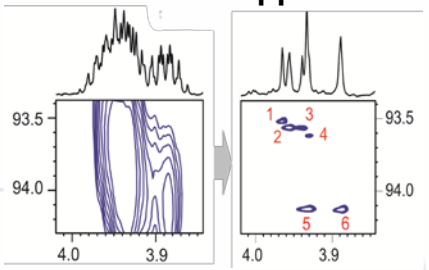

Objective 3 – Workhorse DNP-NMR

- Using color centers to push the sensitivity limit of NMR spectroscopy to single molecules with spectral resolutions sufficient to resolve J-couplings
- Integrating color center hyperpolarization technology with ESR-on-a-chip, NMR-on-a-chip and lab-on-a-chip technology (HyperNMR-on-a-chip) to into low-cost portable units that open new markets for spin-based analytics such as personalized medicine
- Integrating color center hyperpolarization into commercial high-end NMR spectrometers to reduce 1’000 to 10’000-fold the measurement time in standard NMR experiments

The NanoSpin Approach

- Color center dynamic nuclear polarization (DNP)
- Today's NMR and ESR experiments largely limited by their poor sensitivity
- current approaches require extreme experimental conditions
- excessively long polarization times due to slow electron spin thermalization
- NV centers in diamond color centers in silicon carbide (SiC) can dynamically produce very high polarization levels (>95 %) by means of laser irradiation even at room temperature and low B_0
- color center hyperpolarization is not limited to thermal equilibrium Boltzmann polarization levels and thermalization rates
- 1'000 to 10'000-fold enhancement factors become achievable

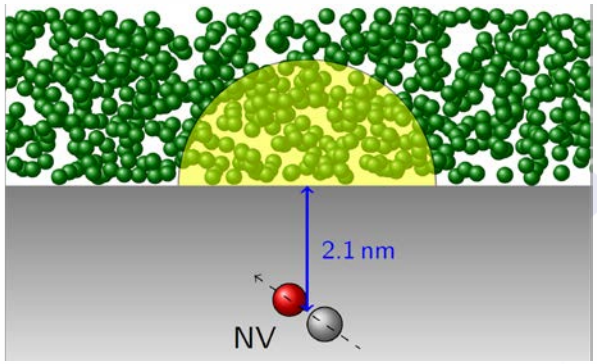

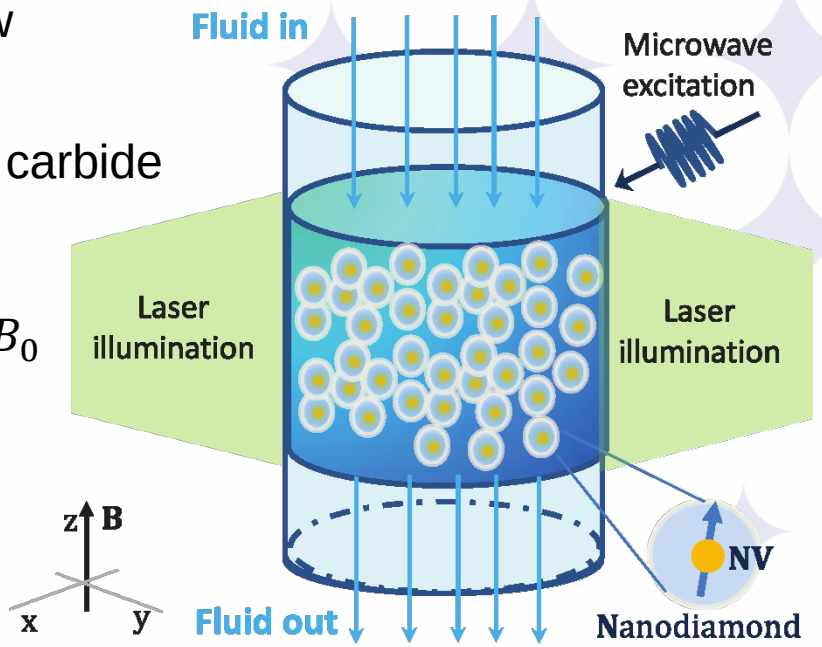

The NanoSpin Concept

- Using color center hyperpolarization in combination with advanced integrated circuit technology and advanced materials science concepts for compact hyperpolarization devices that can revolutionize many disciplines including NMR

NMR spectro-meter	 22 T high resolution NMR spectrometer at NIMS	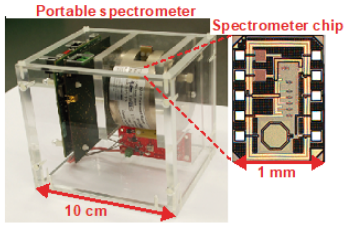 1 T portable combined ESR/DNP-enhanced spectrometer with on-chip polarizer
Sensitivity	**100-fold higher than 1T benchtop spectrometer**	**1'000 to 10'000 -fold higher than 1T benchtop spectrometer with 0.4% polarization**
Size	3-story building	Portable $(10\ \mathrm{cm})^3$
Cost	> €10 Mio.	< €10k for spectrometer including on-chip diamond DNP

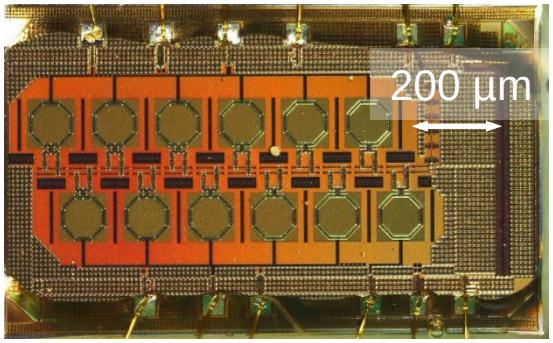

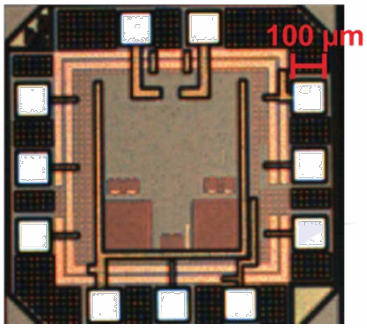

Using improved materials and electronics concepts to turn color center DNP into a widely used method

The ESR- and NMR-on-a-chip concepts allow for miniaturized B_1 field sources with immense frequency agility and complete NMR transceivers on $1\ \mathrm{mm}^2$

The NanoSpin Consortium

J. Anders

I. Schwartz

F. Jelezko

M. Nesladek

P. Cigler

M. Plenio

A. Velders

A. Gali

Selected results

All WPs progressed according to plan ☺

NanoSpin Results: WP2 NV center theory

- Highly efficient and robust pulse sequences for polarization transfer have been developed

An Atomic Scale Fridge

Converting Light to Nuclear Spin Polarisation

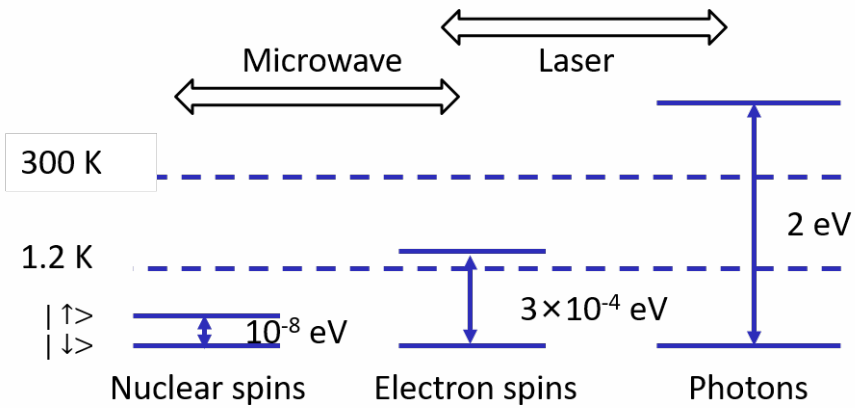

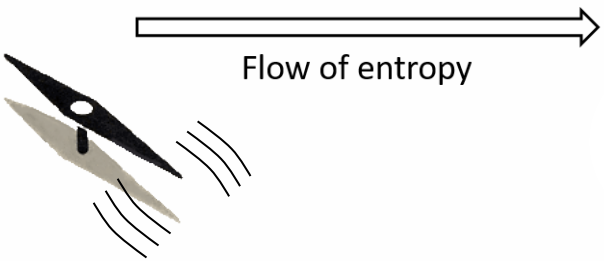

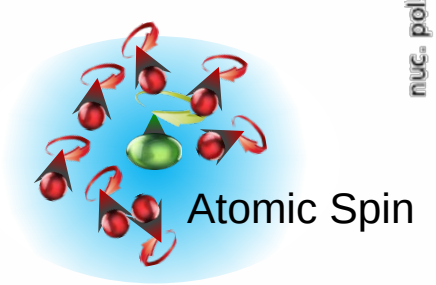

$\omega_L = \Omega = 2$ MHz $\quad A_x = 30$ kHz

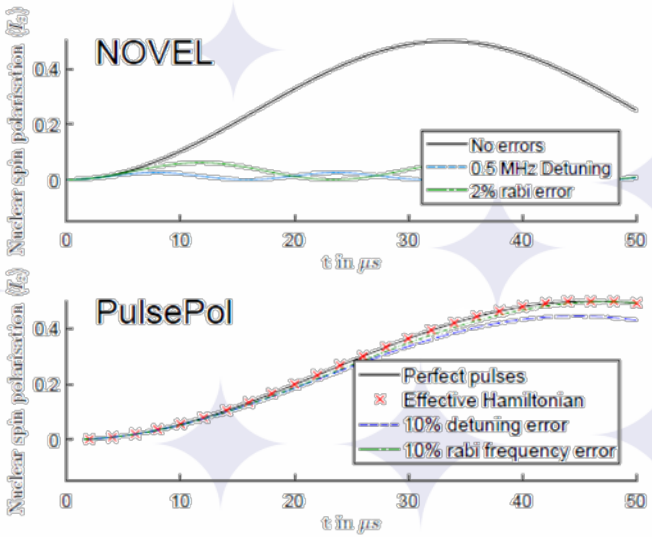

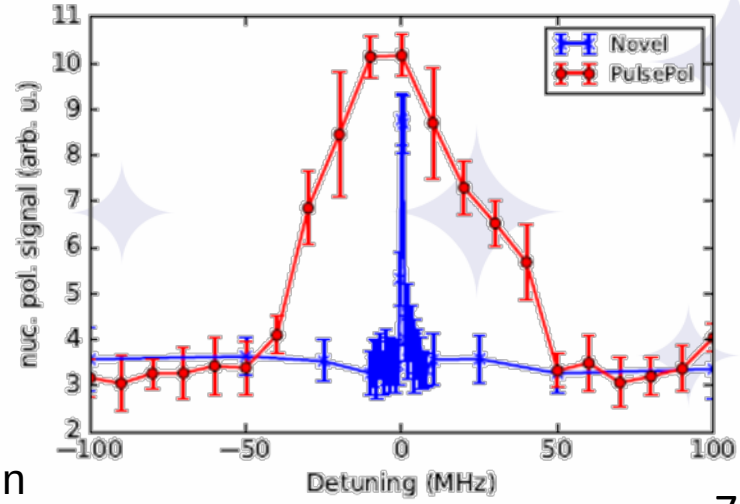

NanoSpin Results: WP3 Material's optimizartion

- New large volume production process for nanodiamonds
- Thin layers of diamond with outstanding coherence
- Nanostructured diamond surfaces with excellent wetting properties
- Optical and ODMR properties verified

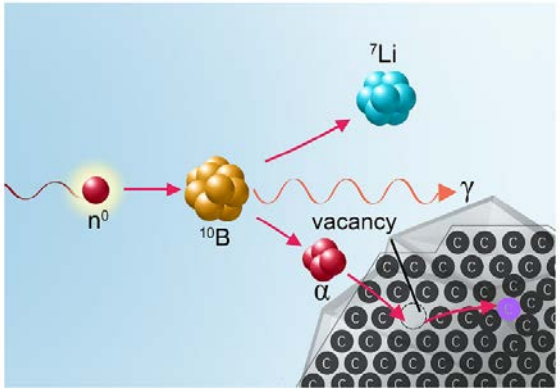

Pyruvic acid wetting nanostructured surface

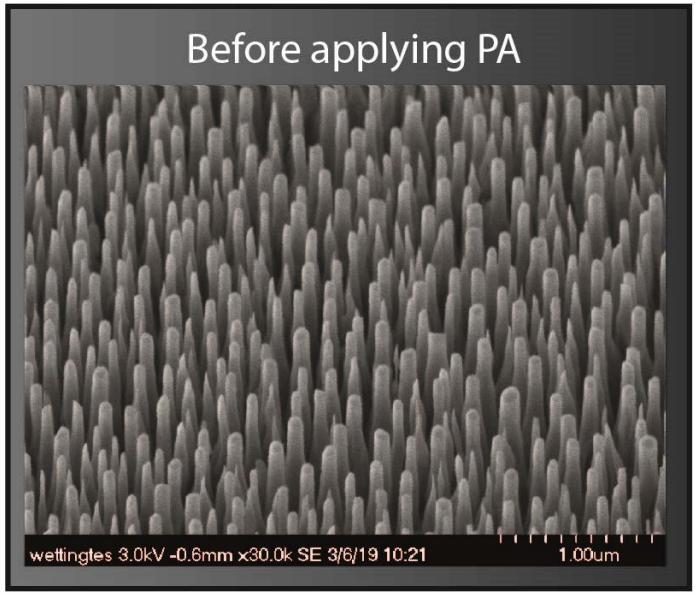

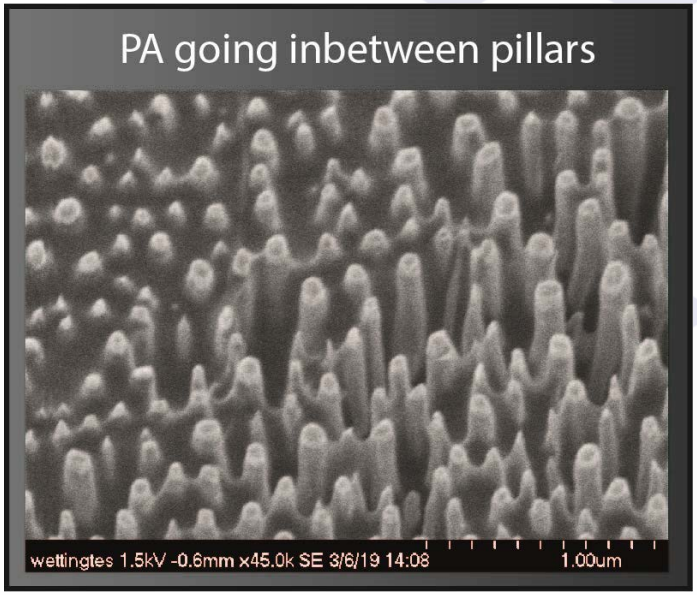

NanoSpin Results: WP3 diamond stacks (1/3)

- **Diamond stacks increase the available polarization volume**
- Efficient polarization requires correcting for small deviations in diamond crystallographic orientation due to preparation of substrates (miscut / tilt of 100 orientation)
- Custom stacking instrument developed with live ODMR monitoring yields (111) axis alignment to within +/- 1 degree

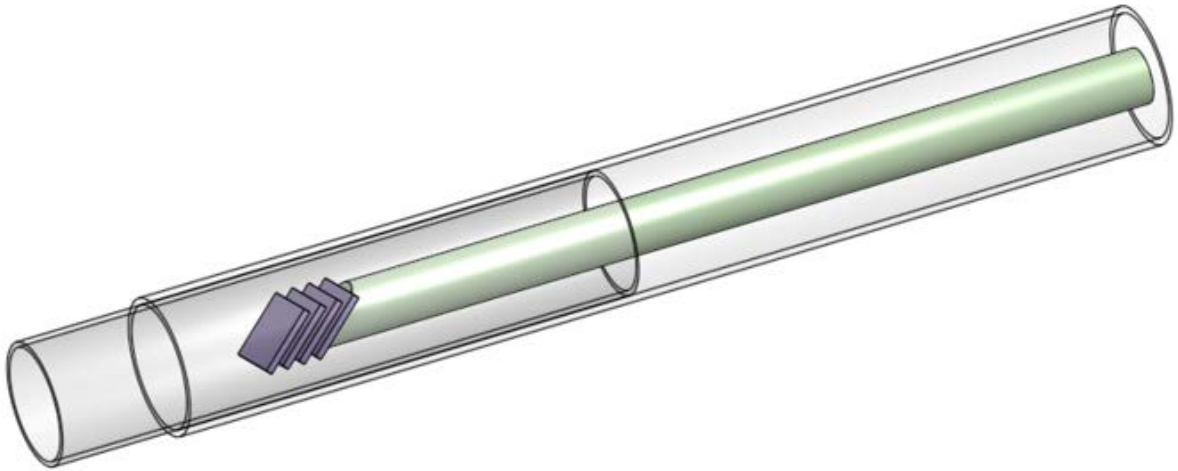

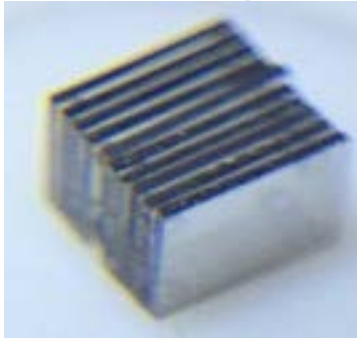

NanoSpin Results: WP3 diamond stacks (2/3)

- **Stacking system + alignment system = optimized stack**

Stacking

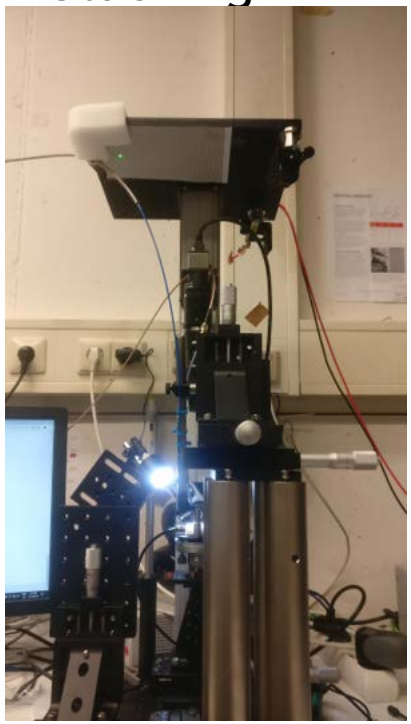

Alignment

Optimized

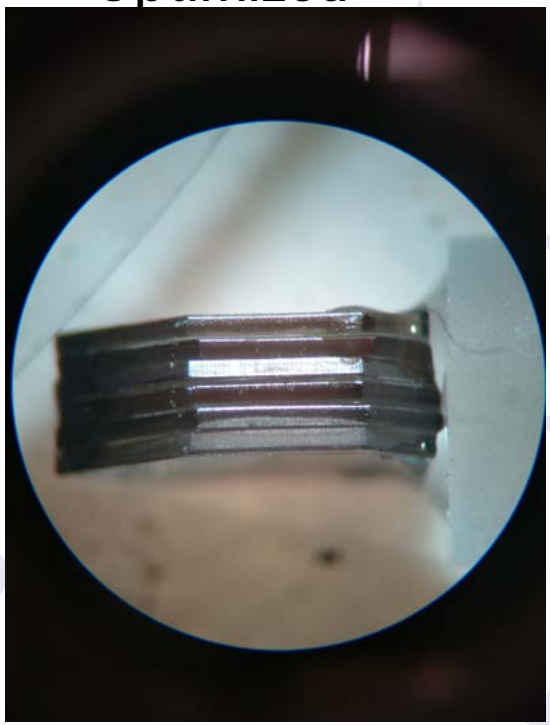

NanoSpin Results: WP3 diamond stacks (2/3)

- **The optimized diamond stack shows both excellent alignment and high optical polarization**

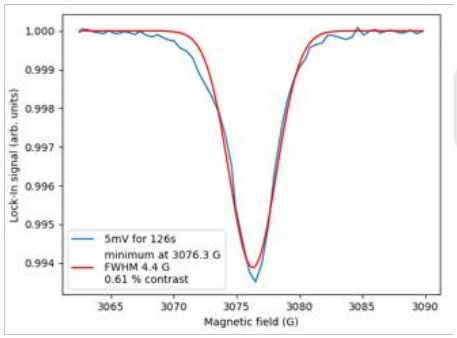

Narrow ODMR line after stacking, enabling efficient polarization

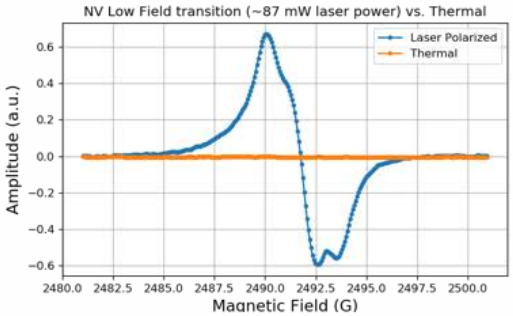

Good illumination of entire stack, resulting in very high NV optical polarization

Stack ready for polarization experiments

NanoSpin Results: WP 4: DNP-on-a-chip (1/2)

- **A complete NMR-on-a-chip transceiver has been manufactured and characterized**
- **1 MHz – 130 MHz, max. current 1.4 A**
- **Input noise: $1\ \mathrm{nV}/\sqrt{\mathrm{Hz}}$**
- **^{1}H Concentration sensitivity @ 1.5 T: 1.5 mM**

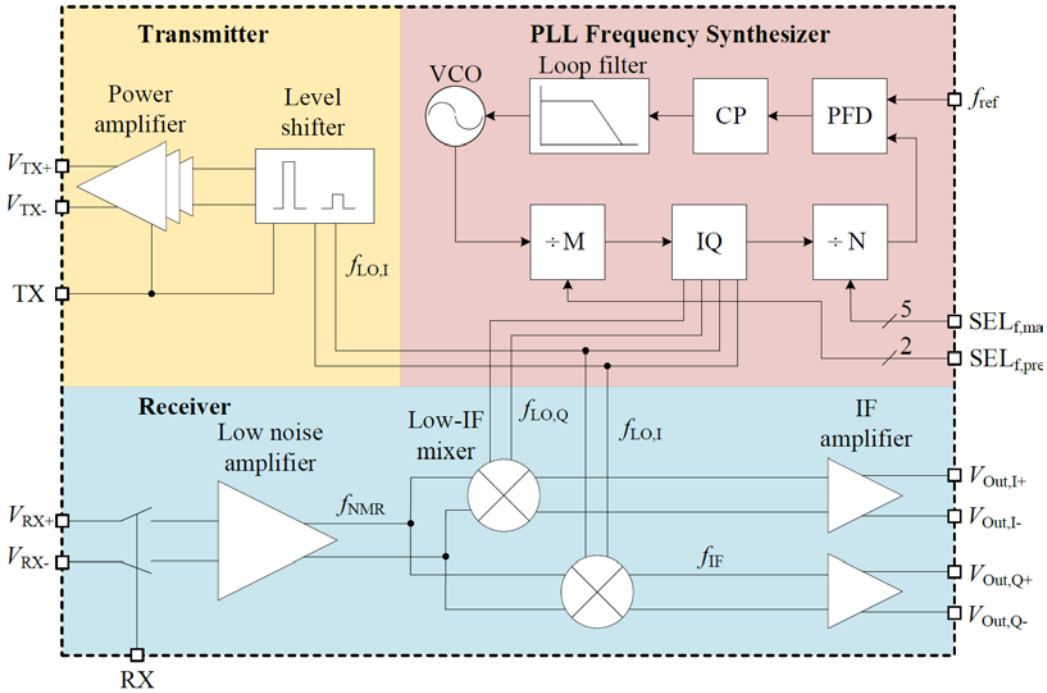

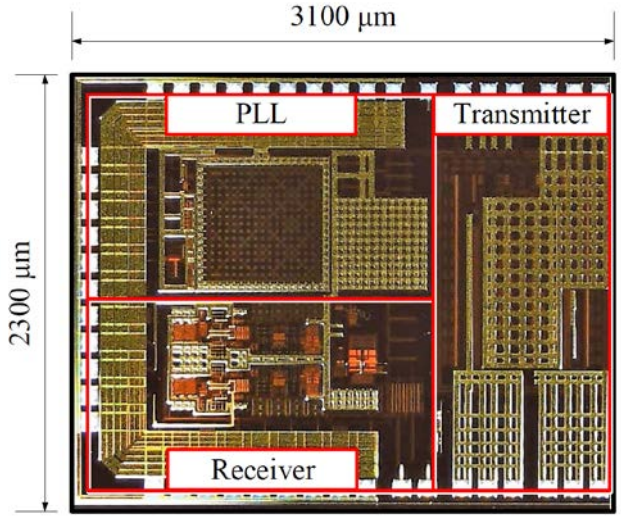

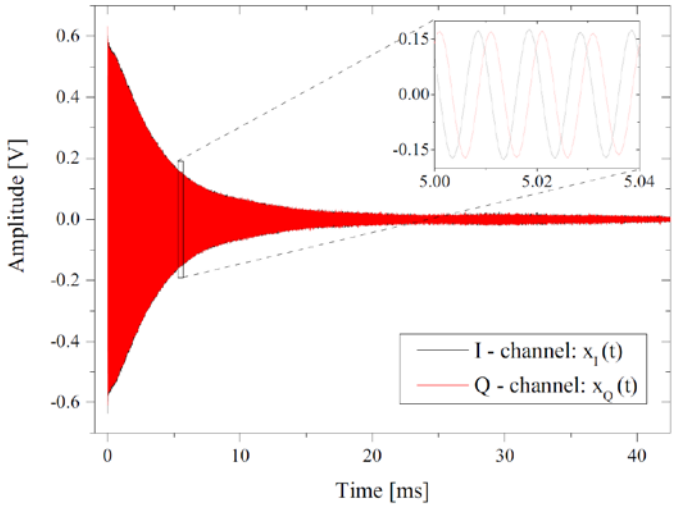

NanoSpin Results: WP 4: DNP-on-a-chip (1/2)

- **A complete EPR-on-a-chip transceiver has been manufactured and characterized**
- **Very agile frequency control ($> 1\ \mathrm{GHz}/\mu\mathrm{s}$) and full phase control (full amplitude control in next generation)**
- **Large B_1 fields $> 1\ \mathrm{mT}$ (i.e. $> 28\ \mathrm{MHz}$) @14 GHz**

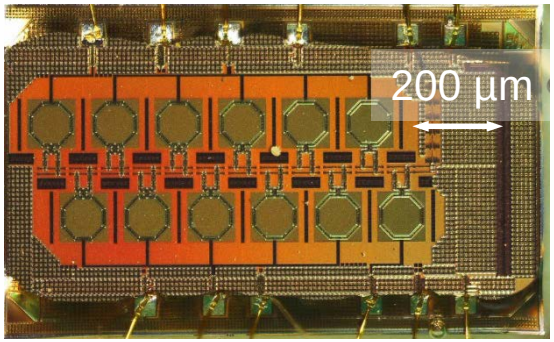

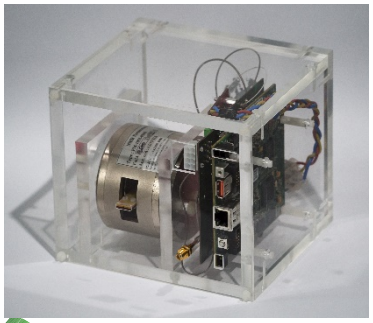

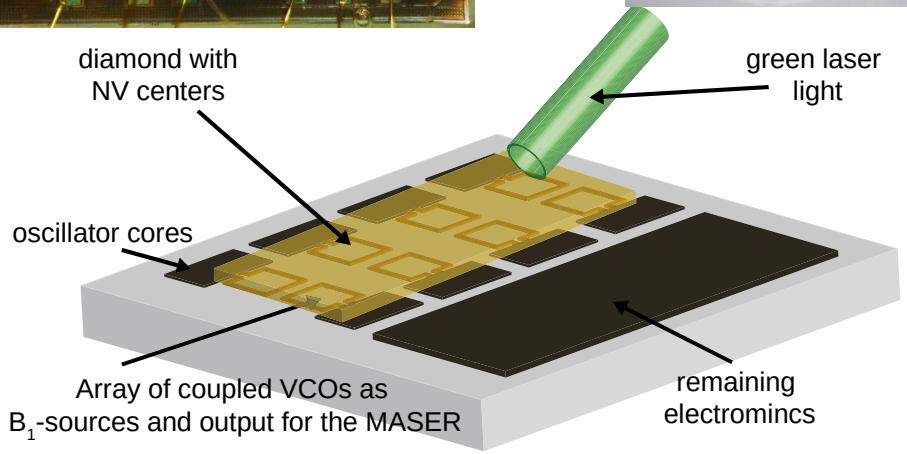

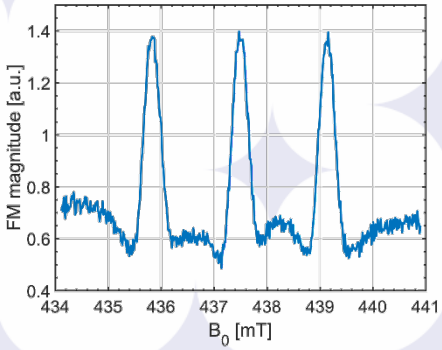

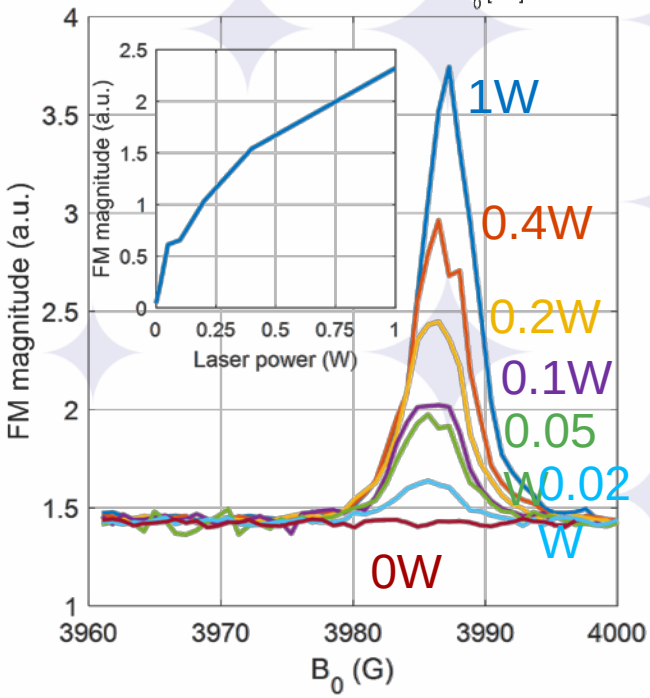

NanoSpin Results: Completed milestones

No.	Designation	Nature*	Delivery date		Partners involved (indicate the number and underline the lead partner)
			Planned delivery date	Actual delivery date	
M1	NV centres with long coherence times		2	M12	UHASS,CAS, NVIS
M2	Design of a diamond-D probe head for comme NMR spectrometers		2	M12	NVIS,WU
M3	First generation of monolithic ESR and NMR spectrometers available	Prototype	M18	M18	USTUTT, NVIS
M4	Optimal hyperpolarisation sequences, experimental set-ups and signal processing available	Software	M18	M18	UULM
M5	Optimised nanodiamonds	Material	M18	M18	UHASS,CAS

Conclusion and outlook

- **A milestones have been completed in time**
- **For the second half of the project we therefore target to complete all milestones as well**

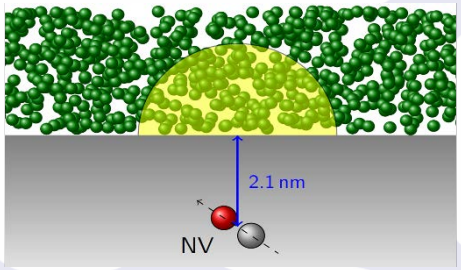

Number	Month	WP #	
M6	20	WP5	DNP setup integrated in spectrometer
M7	24	WP6	Combined portable NMR/ESR spectrometer
M8	30	WP4	Monolithic NMR and ESR spectrometers with optimum pulse control
M9	30	WP2	Proposal for optimal diamond surface termination based on ab initio calculations
M10	30	WP5	Milestone experiment in commercial spectrometer with a 1’000-fold reduced measurement time compared to thermal polarisation
M11	30	WP6	Successful integration of hyperpolarisation into portable setup
M12	30	WP8	Optimized colour centres in wafer and nanocrystalline SiC
M13	36	WP7	Successful NV-based detection of J-couplings in nearby molecules
M14	36	WP6	Portable Hyper-NMR-on-a-chip system

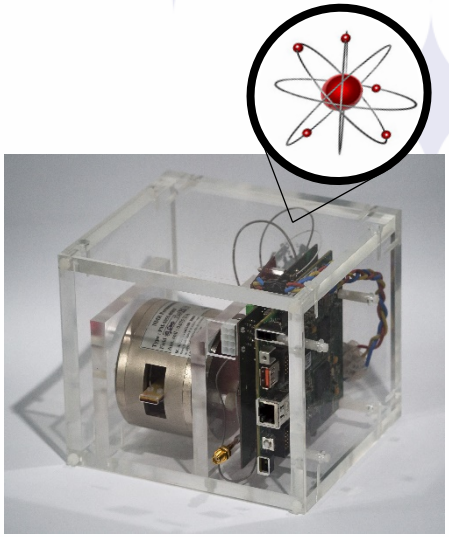

Dissemination

19 journal and conference (4-page peer reviewed) publications

1 book chapter

1 national conference

4 invited talks

2 patent applications

1 popularization article

3 presentations at popularization conferences

QUANTERA

ERA-NET Cofund in Quantum Technologies

CONTACT

jens.anders@iis.uni-stuttgart.de








J. Anders I. Schwartz M. Nesladek P. Cigler A. Gali A. Velders M. Plenio F. Jelezko

This project has received funding from the European Union's Horizon 2020 research and innovation programme under grant agreement No 731473.